International Journal of Applied Operational Research
Vol. 5, No. 1, pp. 1-16, Winter 2015

Journal homepage: ijorlu.liau.ac.ir

Network Data Envelopment Analysis: Application to Gas Companies in Iran

A. R. Amirteimoori*, K. Shahroodi, F. Shaker Mahmoodkiani

Received: 6 June 2014 ; **Accepted:** 10 November 2014

Abstract Energy, due to its increasing usage in various broad areas has been maintained as a vital factor in economic growth and development of societies. Meanwhile, natural gas is considered as one of the most important energy sources. Therefore, the efficiency and the productivity of the gas companies are crucial to be assessed. Numerous examples from industrial multistage processes including internal structures exist, such as petrochemical industry, perfume manufacturing, etc. Despite the fact that internal structures are not considered in conventional DEA, they are being taken into account in Network DEA. An evaluation of efficiency via Network DEA has been conducted in Iranian gas companies during 2002-2004 and the results are discussed in the following pages. After acquiring companies' efficiency scores, we ranked them through Cross Efficiency (CE) technique thoroughly. Ultimately, we indicated the effectiveness of each input /output selected factors in efficiency measurement.

Keywords: Network DEA, Gas companies, Cross Efficiency, Ranking.

1 Introduction

Data Envelopment Analysis (DEA) has been considered as one of the most important tools, widely being used for estimating efficiency in various sectors due to the fact that it needs no assumption regarding the cost or the production function of estimating the efficiency frontier. Since 1957 that Farrel introduced a method of efficiency measurement, several fundamental and comprehensive reviews have been made which their main concern was efficiency assessment. Generally, there are two approaches extensively used in the evaluation of efficiency: Parametric and non-parametric. DEA is a non-parametric method proposed by Charnes, Cooper and Rohdes[1] for the first time. In fact, they extended the Farrel[2] outlook and introduced a mathematical model to measure the relative efficiency of peer production systems or decision making units (DMUs) that have multiple inputs and outputs. Classical DEA models view systems as a whole; in other words, each DMU is treated as a black-box

* **Corresponding Author.** (✉)
E-mail: aamirteimoori@gmail.com (A. R. Amirteimoori)

A. R. Amirteimoori*
Department of Applied Mathematics, Islamic Azad University, Rasht, Iran.

K. Shahroodi
Department of Industrial Management, Islamic Azad University, Rasht, Iran.

F. Shaker Mahmoodkiani
Department of Business Management, Young Researchers and Elite Club, Rasht Branch, Islamic Azad University, Rasht, Iran.

[Downloaded from ijaor.ir on 2026-11-28]

without considering internal structures or operations of individual processes within a system. Hence, Fare and Grosskopf [3, 4] and Fare *et al.* [5] developed Network DEA to measure the efficiency of network systems. Needs for Network DEA is more clarified considering several examples of network structures from actual businesses such as electric power companies, hospitals, broadcasting companies, financial holding companies, etc. In general, particular attention has been focused on efficiency analysis of companies due to its significant role in the evaluation of performance. The acquired results of efficiency analysis assist companies and organizations to cope with the inefficiency reasons and improve their performance considering both in quality and quantity indeed. However DEA models have been applied in many fields such as education, health care, finance, utilities, etc., as far as we are aware, there is no network DEA-based work in the context of gas industry in Iran and the only paper is Amirteimoori and Kordrostami [6] discussed the problem of multi-period data envelopment analysis and applied the developed models in the case of gas companies in Iran.

In this paper, we used the data of 25 gas companies and their production activities are examined in the course of three years. Their production processes are independent and the last output in one year is an input to the next. We have used the network model of Cook *et al.* [7] for deriving the overall efficiency of the whole process and any sub-processes. Our objectives are: firstly, we obtained the overall efficiency across three years considering gas companies' performance during 2002-2004 as a multistage process. Secondly, we identified efficient and inefficient gas companies in each year. Ranking efficient companies was the third object. Finally, we analyzed input/output selected parameters to identify the most effective ones on efficiency evaluation. Based on the results, decision maker will be able to resolve deficiency sources and reallocate resources to DMUs in each year more efficiently in order to improve their performance.

The rest of the paper is arranged as follows: the following section reviews the literature of the subject. Section 3 is related to material and method of this study. Section 4 describes Network DEA models. DEA model for serial multistage processes is given in section5. The Cross Efficiency method is described in section 6. Section7 presents the case study. Section 8 deals with results and discussion. Conclusions appear in section 9.

2 Literature review

A number of studies have focused on parametric methods of efficiency evaluation in gas industry; see, for example, Bernard *et al.* [8], Fabbri *et al.* [9], Farsi *et al.* [10], Granderson [11], Granderson and Linvill [12], Guldmann [13, 14, 15], Hollas and Stansell [16], Kim and Lee [17], Rossi [18], Sing [19],Tai *et al.* [20], etc.

As we know, DEA is classified as a non-parametric model and has been extensively used on the efficiency assess matter. Some applications of DEA technique in gas industry is mentioned: Carrington *et al.* [21] applied DEA model for benchmarking and regulation of Australian gas companies. Howdon [22] estimated the relative efficiency of gas industry for 33 countries located in different continents. Goncharuk [23] used DEA technique for international benchmarking and efficiency estimating of gas distributers. Sadjadi *et al.* [24] proposed a robust super-efficiency DEA model(RSDEA) to obtain efficiency measures and ranks for 27 province gas companies in Iran. Other examples includes Ajalli *et al*. [25], Erbetta and Rappuoli [26], Hollas *et al*. [27], Silveria and Legey [28], etc.

Network DEA models are necessary to assess the efficiency of network systems including internal structures or multi-stage processes. The groundwork of Network DEA

[Downloaded from ijaor.ir on 2026-11-28]

models is related to works like Fare and Grosskopf [3, 4], Seiford and Zhu [29], Fare *et al.* [5], etc. Network DEA models have been applied to banks (Seiford and Zhu [29], Chen and Zhu [30], Chen *et al* [31], Avkiran [32]), Hotels (Hsieh and lin [33],Yu and Lee [34]), sports (Sexton and Lewis [35], Lewis and Sexton [36], Lewis *et al*. [37]), rural productions (Fare and Whittaker [38], Jaenicke [39]), manufacturing (Liu and Wang [40]), supply chains (Liang *et al* [41], Cook *et al* [42]), insurance companies (Kao and Hwang [43]), electric utilities (Tone and Tsutsui [44]), health care applications (Chilingerian and Sherman [45]), etc.

However, these studies are related to the efficiency of multistage systems, but none of them used network DEA in multi-period systems in the context of gas industry except Amirteimoori and Kordrostami [6] developed a DEA-like model to measure the efficiency of the systems which are examined in *T* period.

3 Materials and Methods

The data set is gathered from 25 Iranian gas companies and is related to operations from 2002 to 2004. Due to the fact that results from DEA are very sensitive to the data and types of scaling that are used, we reviewed several studies and finally seven variables from the data set have been chosen as inputs and outputs according to Amirteimoori and Kordrostami [6].

Inputs include capital(I_1), number of staffs(I_2) and operational costs (excluding staff costs)(I_3). Outputs include number of subscribers(O_1), amount of pipe-laying(O_2), length of gas network(O_3) and the revenue of sold-out gas in each period (O_4).

The intermediate measure in the system, which is the input of the stage p(P=2,3), as well as the output of the provious stage, is expressed as follows:

Revenue of sold-out gas (O_4): the revenue of sold-out gas in each period (O_4) is used as an input in later year due to the fact that companies sell out their products and therefore, the revenue of sold-out gas can be used as an input for next year.

The production flow of Iranian gas companies during 2002-2004 is pictured in fig.1.

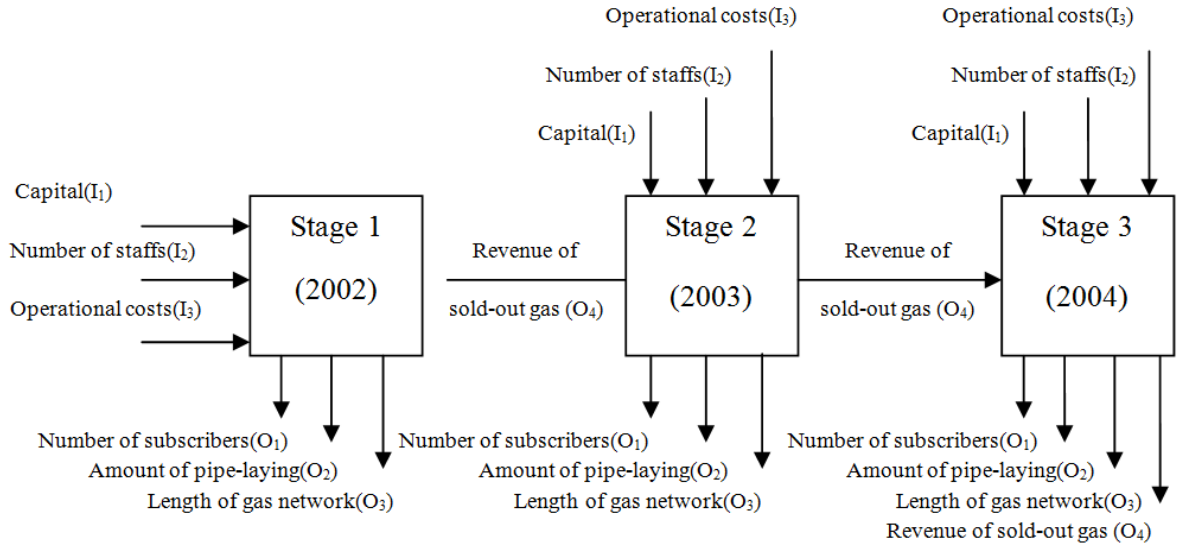

Fig.1 Production process for *j*th Iranian gas company

The initial data including input, intermediate and output from 25 Iranian gas companies during 2002-2004 have been illustrated in table 1 to 3.

[Downloaded from ijaor.ir on 2026-11-28]

Table 1 Iranian gas companies in 2002

Company j	I_1	I_2	I_3	O_1	O_2	O_3	O_4
#1	177430	401	528325	77564	801	201529	41675
#2	124313	129	198598	30242	565	61836	21032
#3	67545	117	131649	14139	153	46233	10398
#4	221338	1094	1186905	44136	803	840446	34960
#5	267806	1079	1323325	27690	251	832616	24461
#6	160912	444	648685	45882	816	251770	23744
#7	47208	165	228730	13505	211	42094	9391
#8	177214	801	909539	72676	654	443507	36409
#9	146325	686	545115	19839	177	341585	18000
#10	43494	106	165470	8508	114	44195	6023
#11	48308	141	180866	7478	248	45841	7063
#12	195138	687	790348	40154	695	233822	31221
#13	55959	146	194470	10818	230	136513	9635
#14	40605	145	179650	6422	127	70380	3523
#15	61402	87	94226	18260	182	36592	12276
#16	108146	152	236722	37770	606	118943	23889
#17	87950	104	91461	22900	170	47650	17983
#18	33707	114	88640	3326	85	13410	1501
#19	100304	254	292995	14780	318	79883	12135
#20	165663	494	523899	28402	652	179315	25163
#21	94286	105	98302	19105	273	32553	10438
#22	195728	503	428566	63701	959	195303	43440
#23	67322	224	287042	15332	241	172316	6574
#24	87050	343	298696	17334	221	16037	9689
#25	102045	104	155514	18082	441	30004	19168

Table 2 Iranian gas companies in 2003

Company j	I1	I2	I3	O1	O2	O3	O4
#1	498505	389	582262	93061	1067.986	318885	50835
#2	224740	135	302160	40404	588.459	176077	26654
#3	134991	117	167329	20356	275.528	135211	11687
#4	487382	1046	1389186	58862	1056.387	142929	40443
#5	359400	1052	1429943	23776	345.29	1697660	20587
#6	612240	413	802226	84967	1176.646	572446	57691
#7	131812	164	294662	16534	215.656	113916	6699
#8	1254847	745	1102266	87336	965.6	936488	33520
#9	334097	632	756345	24719	408.6	603599	12428
#10	92208	107	279873	6875	92	62223	5750
#11	86879	138	218564	11486	206.322	136762	6088
#12	409221	645	816493	52654	696.214	307421	34443
#13	112930	146	244674	17577	190.622	261312	9329
#14	104807	141	211262	11154	101.055	142774	7378
#15	138720	93	132001	21068	317.638	134175	12447
#16	272198	149	329267	42939	572.2	314471	28569
#17	235561	105	94379	31968	239	179012	19435
#18	42134	110	115244	3930	39.283	15569	2721
#19	163181	248	272430	20538	425.17	137461	13235
#20	278912	471	526882	31716	779.927	384094	18658
#21	166000	105	119175	27222	268.85	135251	17176
#22	352989	488	553988	82075	1151.989	472923	58163
#23	155000	219	339145	13999	261.052	351963	8629
#24	260460	344	290392	18099	353.6	236593	11598
#25	129705	106	192110	33389	580.845	155142	23183

[Downloaded from ijaor.ir on 2026-11-28]

Table 3 Iranian gas companies in 2004

Company j	I_1	I_2	I_3	O_1	O_2	O_3	O_4
#1	665771	296	544757	80172	1294.9	495919	44040
#2	368909	127	417595	64215	557.8	291437	32492
#3	187476	107	177253	18526	243.4	176033	9274
#4	765341	793	1600619	60165	1074.4	1761550	37228
#5	1549715	895	1803747	47607	249.1	2044866	17875
#6	392288	317	1120300	111235	932.4	867519	73714
#7	115054	115	278242	10306	346.9	133925	7270
#8	1143899	455	1107969	70124	986.2	1131640	36047
#9	609959	506	759118	26285	351.1	815333	24860
#10	151572	88	266684	7035	128.8	133694	4023
#11	105413	116	219250	9523	222.3	171782	3768
#12	656420	578	1054984	52785	947.4	660851	26085
#13	172068	103	291136	15538	321.9	340813	10379
#14	124778	103	203816	10312	97	176639	4914
#15	184814	81	188664	20741	236.4	201128	13087
#16	589694	152	494136	27284	696.7	393708	7971
#17	373247	96	131205	29805	325.9	240842	13672
#18	67801	104	119324	4156	115.2	24953	2066
#19	175572	251	249043	20118	355.2	185752	13648
#20	394181	388	504215	31075	679.6	479300	16263
#21	177725	108	167911	28116	271.9	195526	15532
#22	458883	376	529316	78188	1279.2	617592	53832
#23	154727	159	349983	21085	357.4	451890	13164
#24	362560	330	277937	20871	598.9	292617	12375
#25	206630	107	257139	33041	519.8	266931	22127

The overall efficiency was measured via the model of Cook *et al.* [7] related to general multistage serial processes. In addition, the efficiency score of each year was evaluated. The General Algebraic Modelling System (GAMS) software was used to solve the applied Network DEA model and the results are discussed in section 7. As it was mentioned before, measurement of Iranian gas companies' performance during 3 years needs a network DEA model; hence, these kinds of models will be discussed in the following section.

4 Network DEA

According to Kao [46], systems with more than one process connected with each other, are networks. Different from basic DEA models, network DEA is not a specific type of model. Fare and Grosskopf [3, 4] and Fare *et al.* [5] developed series of models in order to deal with special cases that classical DEA fail to manage.

Totally, two types of structures are known in Network DEA models, the serial and the parallel structures. The system efficiency/inefficiency of each of these structures can be divided into efficiencies/inefficiencies of component processes. They are briefly discussed.

A serial structure of network DEA, includes DMUs with two or more internal procedures linked with intermediate products, is depicted in fig.2. Intermediate products are outputs of each process which are considered as inputs of the next one. In a serial structure, a DMU is efficient only if all of its processes are efficient. Moreover, the system's efficiency will be

[Downloaded from ijaor.ir on 2026-11-28]

high only if all processes have high efficiencies and will be low if there is a process which its efficiency is very low.

Serial network structures are divided into two forms, the simple and the general form. The differences between this two forms lie on the number of internal processes. There are more than two stages in the general form. Furthermore, in the general form, inputs may enter in each stage and final outputs may be produced in each one too. In addition, the intermediate products may not be used entirely.

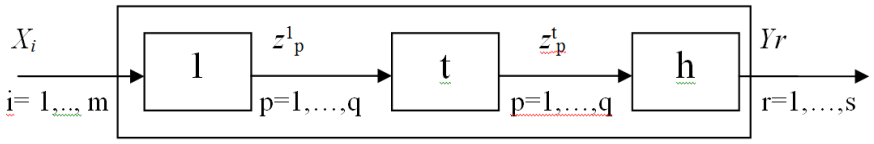

Fig. 2 Serial Structure (Kao[46])

In a parallel structure, see fig.3, whole internal processes are connected in a parallel form and the sum of inputs/ outputs of all processes is equal to the sum of inputs/ outputs of the system. Similar to the series structures, a parallel system is efficient only if all its component procedures are efficient. At this status, if a process is efficient in the parallel structure, it will be preferable to use this process alone for production. Since the underlying assumption of the CCR model is constant returns to scale, the system will be efficient if this efficient process consumes all inputs for production.

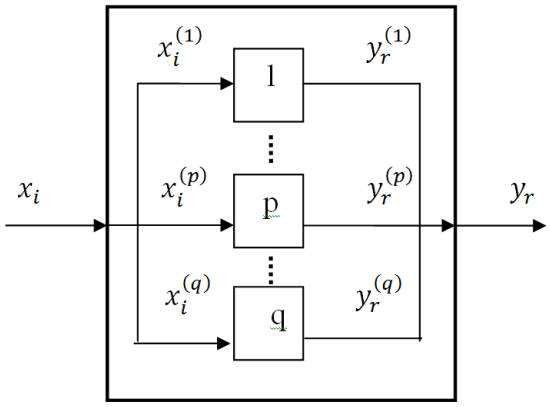

Fig. 3 Parallel Structure (Kao and Hwang [47])

Both systems described above (Fig.2 & Fig.3) are considered as closed systems. In closed systems, all inputs from each stage represent the only inputs to the next one. It means except from the first stage, all other ones have no own independent inputs (and/or outputs). However these closed systems do exist, there are many cases in which each stage is open, that is it has its own inputs (outputs) in addition to the intermediate measures. Several such examples from industrial procedures exist. In many cases a portion of the outputs from one stage may abandon the process as a final output, and the remainder being processed at the next stage in order to get a more pure product; for instance, the petrochemical industries, perfume manufacturing, etc.

Cook *et al.* [7] developed linear models for DMUs that have multiple stages, with each stage being open, having its own inputs and outputs. They also obtained an additive efficiency decomposition of the overall efficiency score. It is discussed in section 5.

[Downloaded from ijaor.ir on 2026-11-28]

5 DEA model for general multistage serial processes

Consider the *p*-stage process as depicted in Fig.4. It is assumed that the components of a DMU are arranged in series. Denote Y_0 as the input vector to the first stage. Here, at each stage *p (p=1,...,p)*, the output vectors take two forms, namely Y_p^1 and Y_p^2. Respectively, Y_p^1 represents the output that leaves the process at this stage and is not passed on as input to the next stage and Y_p^2 indicates the amount of output that becomes input to the next (*p + 1*) stage. In fact, Y_p^2 is considered as intermediate measure. In addition, new inputs Y_p^3 are allowed enter the process at the beginning of stage *p + 1*. Specifically, when p = 2, 3,…, we define:

(1) Y_{po}^{j1} the *o*th component (*o=1,. . . ,O*$_p$) of the O_p-dimensional **output** vector for DMU$_j$ flowing from stage *p*, that leaves the process at that stage without entering as an input to stage *p + 1*.

(2) Y_{pd}^{j2} the *d*th component (*d= 1,. . . ,M*$_p$) of the M_p-dimensional **output** vector for DMU$_j$ flowing from stage *p* and is entered , as a portion of the **inputs** to stage *p + 1*.

(3) Y_{pi}^{j3} the *i*th component (*i = 1,. . . , I*$_p$) of the I_p -dimensional **input** vector for DMUj at the stage *p + 1* entering the process at the beginning of that stage.

It should be noticed that all outputs from the last stage *p* leave the process, so they are viewed as Y_{po}^{j1}. Denote the multipliers for the above factors as:

(1) $\mathcal{U}_{po}$ is the multiplier for the output component Y_{po}^{j1} that is flowing from stage *p*.

(2) H_{pd} is the multiplier for the output component Y_{pd}^{j2} at stage *p*, and is as well the multiplier for that same component because it becomes the input to stage *p + 1*.

(3) $\mathcal{V}_{pi}$ is the multiplier for the input component Y_{pi}^{j3} that enters the process at the beginning of stage *p + 1*.

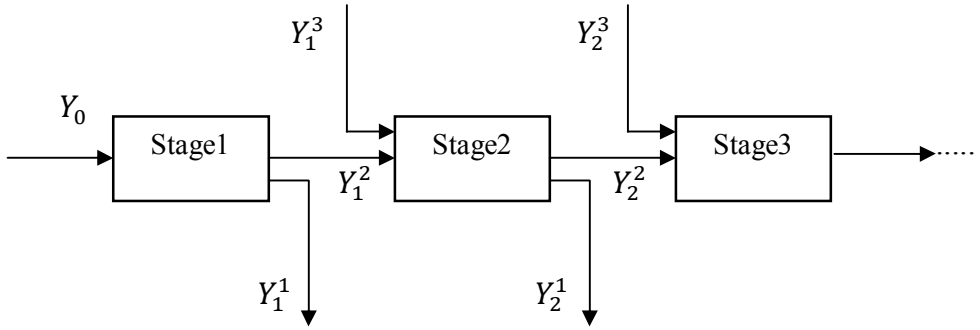

Fig.4 Serial multistage (Cook *et al*. [7])

Thus, the efficiency ratio for DMU$_j$ when *p = 2,3,. . . ,* is expressed as:

$$\vartheta_p = \frac{\left(\sum_{o=1}^{O_p} \mathcal{U}_{po} Y_{po}^{j1} + \sum_{d=1}^{M_p} H_{pd} Y_{pd}^{j2}\right)}{\left(\sum_{d=1}^{M_{p-1}} H_{p-1d} Y_{p-1d}^{j2} + \sum_{i=1}^{I_p} \mathcal{V}_{p-1i} Y_{p-1i}^{j3}\right)} \quad (1)$$

Note that no outputs flow into stage 1. As a result, the efficiency measure for the first stage of the process (namely, p = 1), for DMU$_j$ becomes as follow:

[Downloaded from ijaor.ir on 2026-11-28]

$$\vartheta_1 = \frac{\left(\sum_{o=1}^{O_1} u_{1o} Y_{1o}^{j1} + \sum_{d=1}^{M_1} H_{1d} Y_{1d}^{j2}\right)}{\sum_{i=1}^{I_0} v_{0i} Y_{0i}^{j}} \tag{2}$$

Cook et al.(2010) claimed that the overall efficiency measure of the multistage process can be represented as a convex linear combination of the P (stage–level) measures, namely

$$\vartheta = \sum_{p=1}^{p} w_p \theta_p \quad where \quad \sum_{p=1}^{p} w_p = 1.$$

They expressed that the weights w_p are intended to represent the relative importance or contribution of the performances of individual stages p to the overall performance of the entire process. In fact, they defined the w_p to be the proportion of the total input used at the pth stage as follows:

$$w_1 = \frac{\sum_{i=1}^{I_0} v_{0i} Y_{0i}^{j}}{\sum_{i=1}^{I_0} v_{0i} Y_{0i}^{j} + \sum_{p=2}^{p}\left(\sum_{d=1}^{M_{p-1}} H_{p-1d} Y_{p-1d}^{j2} + \sum_{i=1}^{I_p} v_{p-1i} Y_{p-1i}^{j3}\right)},$$

$$w_p = \frac{\left(\sum_{d=1}^{M_{p-1}} H_{p-1d} Y_{p-1d}^{j2} + \sum_{i=1}^{I_p} v_{p-1i} Y_{p-1i}^{j3}\right)}{\left\{\sum_{i=1}^{I_0} v_{0i} Y_{0i}^{j} + \sum_{p=2}^{p}\left(\sum_{d=1}^{M_{p-1}} H_{p-1d} Y_{p-1d}^{j2} + \sum_{i=1}^{I_p} v_{p-1i} Y_{p-1i}^{j3}\right)\right\}} \quad ,p>1.$$

Thus, the overall efficiency ϑ can be defined in the following form:

$$\vartheta = \frac{\sum_{p=1}^{p}\left(\sum_{o=1}^{O_p} u_{po} Y_{po}^{j1} + \sum_{k=1}^{M_p} H_{pd} Y_{pd}^{j2}\right)}{\left\{\sum_{i=1}^{I_0} v_{0i} Y_{0i}^{j} + \sum_{p=2}^{p}\left(\sum_{k=1}^{M_{p-1}} H_{p-1d} Y_{p-1d}^{j2} + \sum_{i=1}^{I_p} v_{p-1i} Y_{p-1i}^{j3}\right)\right\}} \tag{3}$$

Therefore, according to Cook et al. (2010), model 4 is presented to optimize the overall efficiency ϑ of the multistage process as follows:

$$\max \quad \sum_{p=1}^{p}\left(\sum_{r=1}^{R_p} u_{pr} Y_{pr}^{01} + \sum_{k=1}^{S_p} H_{pk} Y_{pk}^{02}\right)$$

$$s.t.$$

$$\begin{aligned}
&\left\{\sum_{i=1}^{I_0} v_{0i} Y_{0i}^{0} + \sum_{p=2}^{p}\left(\sum_{k=1}^{M_{p-1}} H_{p-1d} Y_{p-1d}^{02} + \sum_{i=1}^{I_p} v_{p-1i} Y_{p-1i}^{03}\right)\right\} = 1,\\
&\left(\sum_{r=1}^{O_1} u_{1r} Y_{1r}^{j1} + \sum_{d=1}^{M_1} H_{1k} Y_{1d}^{j2}\right) \le \sum_{i=1}^{I_0} v_{0i} Y_{0i}^{j},\\
&\left(\sum_{o=1}^{O_P} u_{pr} Y_{po}^{j1} + \sum_{d=1}^{M_p} H_{pd} Y_{pd}^{j2}\right) \le \left(\sum_{d=1}^{M_{p-1}} H_{p-1d} Y_{p-1d}^{j2} + \sum_{i=1}^{I_p} v_{p-1i} Y_{p-1i}^{j3}\right) \forall_j \ ,\\
&u_{po}, H_{pd}, v_{pi}, v_{0i} > 0.
\end{aligned} \tag{4}$$

[Downloaded from ijaor.ir on 2026-11-28]

6 Cross Efficiency Method (CE)

The Cross Efficiency method was first introduced by Sexton *et al.* [48]. Cross efficiency is consisted of a two stages process. In the first stage, the basic DEA model is run and optimal weights of inputs and outputs are calculated for each DMU. Then every DMU will be compared with all other DMUs, applying the weights of the other DMUs.

$$E_{kj} = \frac{\sum_{r=1}^{s} u_r^k y_{rj}}{\sum_{i=1}^{m} v_i^k x_{ij}}, \quad k = 1,\ldots,m \qquad j = 1,\ldots,n$$

Where
y_{rj} = amaunt of *r*-th output for *j*-th DMU
x_{ij} = amaunt of *i*-th input for *j*-th DMU
u_i^k = optimal weights attached to *r*-th output for *k*-th DMU
v_i^k = optimal weights attached to *i*-th input for *k*-th DMU

Thus, E_{kj} represents the ratio given to unit *j* in the CCR run of unit *k*. This score evaluates the efficiency of unit *j* by the optimal weights of unit *k*. Supposing DMU_1 to DMU_n as efficient companies, the Matrix of cross efficiencies will be created as below (table4):

Table 4 Cross efficiency Matrix

	DMU_1	…	DMU_i	…	DMU_n
DMU_1	E_{11}	. . .	E_{1i}	. . .	E_{1n}
⋮					⋮
DMU_i	E_{i1}	…	E_{ii}	…	E_{in}
⋮					⋮
DMU_n	E_{n1}	…	E_{ni}	…	E_{nn}

The average value of DMUs, e_k, calculates for each column and they would be ranked according to those values.

$$e_k = \frac{\sum_{j \neq k} E_{jk}}{n-1}$$

It would be expected that the average cross efficiency scores would be lower than the original scores, as a DMU cannot have a cross efficiency score higher than the original DEA score, as this shows each DMU in its best possible condition.

7 Case study

The sample size of this study is 25 gas companies in Iran. The data set was derived from operation during 2002 -2004 (Tables 1, 2, 3).

[Downloaded from ijaor.ir on 2026-11-28]

Data including capital(I_1), number of staffs(I_2), operational costs (excluding staff costs)(I_3), number of subscribers(O_1), amount of pipe-laying(O_2), length of gas network(O_3) and the revenue of sold-out gas in each period (O_4), were collected from 2002 to 2004 .
The network DEA model via GAMS software was applied in order to measure the efficiency of Iranian gas companies.

8 Results and discussion

Overall efficiency and internal process efficiencies of gas companies were calculated using network DEA model, through model 4, presented in section 5. Results are listed in table.

Table 5 Efficiency measures for Iranian gas companies

Company j	E_t	E_1	E_2	E_3
#1	1	1	1	1
#2	1	1	1	1
#3	0.81	0.71	0.87	0.85
#4	1	1	0.8	0.85
#5	1	0.95	1	1
#6	1	0.97	1	1
#7	1	0.88	0.73	1
#8	1	1	0.89	0.88
#9	0.89	0.89	0.74	1
#10	0.59	0.64	0.55	0.57
#11	0.92	0.92	0.87	0.84
#12	0.73	0.74	0.71	0.70
#13	1	1	1	1
#14	0.73	0.69	1	0.66
#15	0.98	0.98	0.99	0.99
#16	1	1	1	1
#17	1	1	1	1
#18	0.6	0.45	0.75	0.84
#19	0.73	0.59	0.95	0.92
#20	0.81	0.70	0.92	0.87
#21	1	1	1	1
#22	1	1	1	1
#23	1	0.95	1	1
#24	0.9	0.50	0.92	1
#25	1	1	1	1

The first column of table5 is related to companies' number. The next column, Et, reports the overall efficiency scores of 25 Iranian gas companies during 2002-2004. Efficiency scores of each company in each year (E_1, E_2 and E_3) are also available in the last three columns of table 5. It can be seen that fourteen companies (#1, #2, #4, #5, #6, #7, #8, #13, #16, #17, #21, #22, #23 and #25) are overally efficient, while only eight companies (#1, #2, #13, #16, #17, #21, #22 and #25) are overally efficient across all periods. We found that company #10 is the low-ranked company with the efficiency scores 0.55 and 0.57 respectively in 2003 and 2004. However, company #18 is the low-ranked company with the efficiency scores 0.45 in 2002. As it can be seen from the results, company #10 is totally the low-ranked company during 2002-2004 with the score 0.59.

[Downloaded from ijaor.ir on 2026-11-28]

We also used Cross efficiency technique to rank the efficient companies in each year. After creating the Cross efficiency matrix of the efficient companies in each year from 2002 to 2004, the average cross efficiency score has been calculated for each DMU and they are ranked according to those values. Results are shown in the next three tables (Tables 6, 7, 8)

Table 6 Ranking gas companies through CE method in 2002

Company j	CE score	Ranking
#1	0.6796	5
#2	0.7279	3
#4	0.5863	7
#8	0.5642	10
#13	0.5726	9
#16	0.8129	1
#17	0.5847	8
#21	0.6196	6
#22	0.7439	2
#25	0.6887	4

The first column of table6 represents the efficient companies in 2002. The second column deals with the average Cross Efficiency scores. And the last one is dedicated to the ranking of efficient gas companies in 2002. As it can be seen, company #16 has the highest average cross efficiency score 0.8129 and is ranked as the first. Company #22 and Company #2 are the second and third efficient companies, respectively with the average cross efficiency scores 0.7439 and 0.7279. Company #8 is the low-ranked company with the average cross efficiency score 0.5642.

Table7. Ranking gas companies through CE method in 2003

Company j	CE score	Ranking
#1	0.7775	8
#2	0.8052	6
#5	0.6482	11
#6	0.8550	3
#13	0.8050	7
#14	0.2107	12
#16	0.8680	1
#17	0.7300	9
#21	0.8420	4
#22	0.8260	5
#23	0.7060	10
#25	0.8610	2

The efficient companies in 2003 are listed in the first column of table7. The second column displays average cross efficiency scores in 2003. And the last one is related to the ranking of efficient gas companies in 2003. Results in table7 shows that company #16 is the high-ranked

[Downloaded from ijaor.ir on 2026-11-28]

efficient company in 2003 with the average cross efficiency score 0.8680. Company #25 and Company #6 are the second and third efficient companies, respectively with the average cross efficiency score 0.8610 and 0.8550. Company #14 is the low-ranked company with the average cross efficiency score 0.2107.

Table8. Ranking gas companies through CE method in 2004

Company j	CE score	Ranking
#1	0.8473	4
#2	0.8458	5
#5	0.4758	14
#6	0.7641	10
#7	0.6989	12
#9	0.7349	11
#13	0.8415	6
#16	0.5936	13
#17	0.7794	8
#21	0.7759	9
#22	0.8638	3
#23	0.9210	1
#24	0.8187	7
#25	0.8728	2

Table8 displays ranking of efficient gas companies in 2004. The first column of table8 shows the efficient companies in 2004. The second column reports average cross efficiency scores. The last one represents ranking of the efficient gas companies in 2004. According to the Results in table8, company #23 is the high-ranked efficient company in 2004 with the average cross efficiency score 0.9210. Company #25 and Company #22 are the second and third efficient companies, respectively with the average cross efficiency score 0.8728and 0.8638. Company #5 is the low-ranked company with the average cross efficiency score 0.4758.

Table9. Effectiveness Analysis on inputs parameters during 2002-2004

Company j	E_t	E_c	E_{ns}	E_{oc}
#1	1	1	1	1
#2	1	1	1	1
#3	0.81	0.73	0.81	0.79
#4	1	1	1	1
#5	1	0.94	1	1
#6	1	1	1	1
#7	1	0.62	1	1
#8	1	0.8	1	1
#9	0.89	0.89	0.89	0.72
#10	0.59	0.49	0.57	0.59
#11	0.92	0.57	0.92	0.92
#12	0.73	0.51	0.73	0.73
#13	1	1	1	1
#14	0.73	0.61	0.73	0.73

[Downloaded from ijaor.ir on 2026-11-28]

Company j	E_t	E_c	E_{ns}	E_{oc}
#15	0.98	0.94	0.98	0.87
#16	1	1	1	1
#17	1	1	1	1
#18	0.6	0.4	0.6	0.57
#19	0.73	0.58	0.73	0.72
#20	0.81	0.63	0.81	0.81
#21	1	1	1	0.87
#22	1	0.99	1	1
#23	1	0.96	1	1
#24	0.9	0.87	0.9	0.63
#25	1	1	1	1

Table9 indicates the significance of each input applied factor in estimating of efficiency. Companies are listed in the first column. The next column reports E_t, the overall efficiency score during 2002-2004. The third one is deal with E_c, the overall efficiency score when the first input factor (capital) has been omitted. The overall efficiency score after deleting the second input (number of staffs), E_{ns}, is indicated in the fourth column. Finally, the last one, E_{oc}, is related to the overall efficiency score disregarding the third input (operational cost). It is obvious that the overall efficiency scores, after deleting the second input factor (number of staffs), are the same as when it was considered. We found that, the efficient companies (#1, #2, #4, #5, #6, #7, #8, #13, #16, #17, #22, #23 and #25), except one (#21), have been maintained efficient after calculating the overall efficiency without considering the operational cost as an input. Furthermore, some of the efficient companies (#5, #7, #8, #22 and #23) do not work efficiently when capital is omitted from input factors.

Table 10 Effectiveness Analysis on outputs parameters during 2002-2004

Company j	E_t	E_{su}	E_p	E_l	E_r
#1	1	1	1	1	1
#2	1	1	1	1	1
#3	0.81	0.8	0.8	0.78	0.78
#4	1	1	1	0.75	1
#5	1	1	1	0.52	1
#6	1	1	1	1	1
#7	1	1	0.77	1	1
#8	1	0.88	1	0.94	1
#9	0.89	0.89	0.89	0.59	0.89
#10	0.59	0.58	0.58	0.56	0.58
#11	0.92	0.92	0.74	0.92	0.92
#12	0.73	0.69	0.71	0.71	0.69
#13	1	1	1	0.81	1
#14	0.73	0.69	0.73	0.62	0.69
#15	0.98	0.97	0.98	0.98	0.98
#16	1	1	1	1	1
#17	1	1	1	1	1
#18	0.6	0.6	0.44	0.6	0.59
#19	0.73	0.73	0.69	0.72	0.73
#20	0.81	0.81	0.7	0.78	0.76

[Downloaded from ijaor.ir on 2026-11-28]

Company j	E_t	E_{su}	E_p	E_l	E_r
#21	1	1	1	1	1
#22	1	1	1	1	1
#23	1	1	1	0.82	1
#24	0.9	0.9	0.71	0.9	0.89
#25	1	1	1	1	1

Table10 deals with the overall efficiency scores while each time one of the output applied factors is omitted in order to find the most effective one(s) in efficiency measurement. In the first column, companies are listed. The overall efficiency score during 2002-2004, E_t, is given in column2. Column3, E_{su}, represents the overall efficiency score excluding number of subscribers as an output. As it is shown, all the efficient companies (#1, #2, #4, #5, #6, #7, #13, #16, #17, #21, #22, #23 and #25),except one (#8), are efficient if we evaluate the overall efficiency without considering number of subscribers as an output. We have calculated the overall efficiency after deleting amount of pipe-lying from the output factors. Results are listed in column4. However all the efficient companies (#1, #2, #4, #5, #6, #8, #13, #16, #17, #21, #22, #23 and #25), except one (#7), are still efficient, some of companies (#11, #18, #19, #20 and #21) get more inefficient when this factor was omitted. E_l is related to the overall efficiency score without considering length of gas network. In this case, only nine companies (#1, #2, #6, #7, #16, #17, #21, #22 and #25) remain efficient and most of the others decrease in efficiency scores. For example, companies (#4, #5, #8, #13 and #23), respectively, with efficiency scores 0.75, 0.52, 0.94, 0.81 and 0.82 are inefficient, while they were efficient before. Moreover, decreasing in efficiency scores of companies like #3, #9, #14 and #20 is obvious. Finally, the last output (revenue of sold-out gas) was omitted in the overall efficiency calculation and results are appeared in the last column. However efficient companies (#1, #2, #4, #5, #6, #7, #8, #13, #16, #17, #21, #22, #23 and #25) are still efficient, companies #3, #12 and #20 have a sensible fall in their efficiency scores.

9 Conclusions

Classical models in DEA studies, view the system as a black-box excluding the internal processes. So, traditional DEA cannot provide a good estimation of relative efficiency in such systems. Network DEA is used to analyse the relative efficiency of network systems and their internal structures. Therefore, in this paper we have applied the approach proposed by Cook *et al.* [7] for open general multistage serial processes in order to evaluate performance of Iranian gas companies during 2002-2004. We obtained the efficiency scores of the companies in the individual periods along with a whole measure. Furthermore, efficient and inefficient companies are determined in each year. Moreover, we ranked efficient gas companies via Cross Efficiency method. Ultimately, we analysed the importance of input/output selected factors in efficiency evaluation. This paper discussed the network DEA model under the assumption of constant returns to scale (CRS). The model can be applied in variable returns to scale (VRS) environment.

[Downloaded from ijaor.ir on 2026-11-28]

References

1. Charnes, A., Cooper, WW.,Rhodes, E., (1978). Measurement the efficiency of decision making unit. European Journal of Operational Research, 2, 429-444.
2. Farrell, M.J., (1957). The measurement of productive efficiency. Journal of Royal Statistical Society, Series A, 120, 253-281.
3. Färe, R., Grosskopf, S., (1996). Productivity and intermediate products: A frontier approach. Economics Letters, 50, 65-70.
4. Fare, R., Grosskopf, S., (2000). Network DEA. Socio-Economic Planning Science, 34, 35-49.
5. Färe, R., Grosskopf, S. and Whittaker, G.,(2007). 'Network DEA'. Chapter 12 in Modelling Data Irregularities and Structural Complexities in Data Envelopment Analysis, J. Zhu and W.D. Cook (eds.), Springer, New York, 209-240.
6. Amirteimoori, A., Kordrostami, S.,(2010).'Multi-Period Efficiency Analysis in Data Envelopment Analysis'. International Journal of Mathematics in Operational Research, Vol.2, No.1, 113-128.
7. Cook, W., Zhu, J., Bi, G.,Yang, F., (2010). Network DEA: Additive Efficiency Decomposition. European Journal of Operational Research, 207, 1122-1129.
8. Bernard, J.-T., D. Bolduc, A. Hardy (1998). The Marginal Cost of Natural Gas Distribution Pipelines: The Case of Société en Commandite Gaz Métropolitain. Québec, Working Paper, Département d'économique, Université Laval Québec, Canada.
9. Fabbri, P.,G.Fraquelli, R.Giandrone ,(2000). Costs, Technology and Ownership of Gas Distribution in Italy. Managerial and Decision Economics, 21, 71-81.
10. Farsi, M., Filippini, M., Kuenzle, K., (2007). Cost efficiency in the Swiss gas distribution sector. Energy Economics, 29(1), 64-78.
11. Granderson, G., (2000). Regulation,Open-Access Transportation and Productive Efficiency. Review of Industrial Organization, 16, 251-266.
12. Granderson, G., C. Linvill, (1999). Parametric and Nonparametric Approaches to Benchmarking the Regulated Firm. Journal of Productivity Analysis, 12 (3), 211-231.
13. [13] Guldmann J.M., (1983). Modelling the structure of gas distribution costs in urban areas. Regional Science and Urban Economics, 13, 299-316.
14. Guldmann J.M., (1984). A further note on the structure of gas distribution costs in urban areas. Regional Science and Urban Economics, 14, 583-588.
15. Guldmann J.M., (1985). Economies of scale and natural monopoly in urban utilities: the case of natural gas distribution. Geographical Analysis, 17, 302-317.
16. Hollas, D., St. R. Stansell, (1988). Regulation, Interfirm Rivalry, and the Economic Efficiency of Natural Gas Distribution Facilities. The Quarterly Review of Economics and Business 28 (4), 21-37.
17. Kim,T.-Y., J.-D.Lee, (1996). Cost Analysis of Gas Distribution Industry with Spatial Variables. The Journal of Energy and Development, 20(2), 247-267.
18. Rossi, M., (2001). Technical Change and Efficiency Measures: the Post-Privatisation in the Gas Distribution Sector in Argentina. Energy Economics, 23, 295-304.
19. Sing, M., (1987). Are Combination Gas and Electric Utilities Multiproduct Natural Monopolies?. Review of Economics and Statistics 69 (3), 392-398.
20. Tai Y. K, Jeong D. L, Y. H Park,Boyoung Kim, (1999). International comparisons of productivity and its determinants in the natural gas industry. Energy Economics, Vol. 21, Issue 3, 273 -293.
21. Carrington, R., Coelli, T., Groom, E., (2002). International benchmarking for monopoly price regulation: The case of Australian gas distribution. Journal of Regulatory Economics, 21(2), 191–216.
22. Hawdon,D., (2003). Efficiency, performance and regulation of the international gas industry – A bootstrap DEA approach. Energy Policy, 31, 1167–1178.
23. Goncharuk, A.G., (2008). Performance benchmarking in gas distribution industry. Benchmarking. An International journal, Vol.15, NO.5, 548-559.
24. Sadjadi, S.J., Omrani, H., Abdollahzadeh, M., Alinaghian,M., Mohammadi, H.,(2011). A robust super-efficiency data envelopment analysis model for ranking of provincial gas companies in Iran. Expert Systems with Applications, 38, 10875–10881.
25. Ajalli, M., (2011). Analysis of the Technical Efficiency of the Provincial Gas Companies in Iran Making use of the Synthetic Model of Data Envelopment Analysis and Anderson-Peterson Method (DEA-AP). European Journal of Social Sciences, 25(2):156-160.
26. Erbetta, F. and Rappuoli, L., (2003). Estimating Optimal Scale and Technical Efficiency in the Italian Gas Distribution Industry. HERMES Working Paper, No. 6, University of Eastern Piedmont.

[Downloaded from ijaor.ir on 2026-11-28]

27. Hollas, D.R., Macleod, K.R., Stansell, S.R., (2002). A Data Envelopment Analysis of gas utilities efficiency. Journal of Economics and Finance, 26, 123-137.
28. Silveira, J.P., Legey, L.F.L., (2007). Measuring Efficiency of Natural Gas Distributors in Brazil. Proceedings of the 9th European Conference of the IAEE, Florença.
29. Seiford, L.M., Zhu, J. (1999). Profitability and marketability of the top 55 US commercial banks. Management Science, 45 (9), 1270–1288.
30. Chen, Y., Zhu, J., (2004). Measuring information technology's indirect impact on firm performance. Information Technology and Management, 5, 9-22.
31. Chen,Y.,Cook,W.D.,Li,N.,Zhu, J., (2009). Additive efficiency decomposition in two-stage DEA. European Journal of Operational Research, 196, 1170-1176.
32. Avkiran, N.K., (2009). Opening the black box of efficiency analysis: An illustration with UAE banks. Omega, 37, 930-941.
33. Hsieh, L.F., Lin, L.H., (2010). A performance evaluation model for international tourist hotels in Taiwan-An application of the relational network DEA. International Journal of Hospitality Management, 29, 14-24.
34. Yu, M.M., Lee, B.C.Y., (2009). Efficiency and effectiveness of service business: Evidence from international tourist hotels in Taiwan. Tourism Management, 30, 571-580.
35. Sexton, T.R., Lewis, H.F., (2003). Two-stage DEA: An application to major league baseball. Journal of Productivity Analysis, 19, 227–249.
36. Lewis, H., Sexton, T., (2004). Network DEA: Efficiency Analysis of Organizations with complex internal Structure. Computer and Operations Research, 31, 1365-1410.
37. Lewis, H.F., Lock, K.A., Sexton, T.R., (2009). Organizational capability, efficiency, and effectiveness in Major League Baseball: 1901-2002. European Journal of Operational Research, 197,731-740.
38. Färe, R., Grosskopf, S. and Whittaker, G., (2007). Network DEA. Chapter 12 in Modelling Data Irregularities and Structural Complexities in Data Envelopment Analysis, J. Zhu and W.D. Cook (eds.), Springer, New York, 209-240.
39. Jaenicke, E.C. (2000). Testing for intermediate Outputs in dynamic DEA models: According for soil capital in rotational crop production and productivity measures. Journal of productivity analysis, 14(3), 247-266.
40. Liu, S.T., Wang, R.T., (2009). Efficiency measures of PCB manufacturing firms using relational two-stage data envelopment analysis. Expert Systems with Applications, 36, 4935-4939.
41. Liang, L., Yang, F., Cook, W.D., Zhu, J., (2006). DEA models for supply chain efficiency evaluation. Annals of Operations Research, 145, 35-49.
42. Cook, W.D., Liang, L., Yang, F.,Zhu, J., (2007). DEA models for supply chain or multi-stage structure. Chapter 11 in Modelling Data Irregularities and Structural Complexities in Data Envelopment Analysis, J. Zhu and W.D. Cook (eds.), Springer, New York, 189-208.
43. Kao, C., Hwang S., (2008). Efficiency decomposition in two-stage data envelopment analysis: An application to non-life insurance in Taiwan. European Journal of Operational Research, 185, 418-429.
44. Tone K, Tsutsui M., (2009). Network DEA: A slacks-based measure approach. European Journal of Operational Research, 197, 243-252.
45. Chilingerian, J., Sherman, H.D., (2004). Health care applications: From hospitals to physicians, from productive efficiency to quality frontiers. In: Cooper W.W., Seiford L.M.and Zhu J. Handbook on data envelopment analysis. Springer. Boston.
46. Kao, C., (2009). Efficiency decomposition in network data envelopment analysis: A relational model. European Journal of Operation Research, 192, 949-962.
47. Kao C., Hwang, (2010). Efficiency measurement for network systems: IT impact on firm performance. Decision Support Systems, 48, 437-446.
48. T. R. Sexton, R. H. Silkman, A. J. Hogan, (1986). Data envelopment analysis: Critique and extensions. In R. H. Silkman (Ed.), Measuring efficiency: An assessment of data envelopment analysis, 73-105, San Francisco: Jossey- Bass.

[Downloaded from ijaor.ir on 2026-11-28]