International Journal of Applied Operational Research
Vol. 7, No. 1, pp. 77-85, Winter 2017

Journal homepage: ijorlu.liau.ac.ir

Mathematical Dynamics, Kinematics Modeling and PID Equation Controller of QuadCopter

M. Eatemadi*

Received: 8 April 2016 ; **Accepted:** 7 September 2016

Abstract Quadcopter is the Unmanned Aerial Vehicle that can vertical tack off and landing. its useful platform for many applications in Commercial, civil or military .In this article ,we present the Dynamics and Kinematics model of quadcopter and the effect of forces by introducing two frames on the ground and it's body, also we design and implement the PID controller then found the best way of manual tuning for adjusting the PID coefficient in Symmetric quadcopter, we use the 10 DOF IMU consist of three axis gyroscope ,accelerometer and magnetometer with three PID controller for Roll, Pitch, Yaw angle and the separate PID controller for altitude of quadcopter Robot, also build it based on extracted result.

Keywords: Quadcopter, PID controller, Dynamics model, Unmanned Aerial Vehicle.

1 Introduction

A quadcopter is a flying vehicle that able to vertical tack off, landing and hover in the sky. It is very useful for military, rescue, Mine Detection, geography or any other aerial Photography operations [1].This robot uses four rotors with the same size and equally spaced, usually placed at the corners of robot frame to push air downwards, so creating force for flying in the air. the motions and balances of a Quadcopter provide by changing the motor speeds of all four motors, that creating the lift forces, each pair of motors spinning in opposite directions to neutralize motors torques. it cruises to forward, backward, left and right side, increasing the velocity of motor spinning at opposite side, that cause to increase thrust on this side and lead to move to opposite direction. The mechanism control of the quadcopter uses six degrees of freedom with translational and rotational movements. It makes an unstable and complicated. As far as we know, the good features such as heavy payload, simple structure, well maneuverability, and low cost are developing. That led to introduce several methods for control system of quadcopter like robust feedback controllers (H∞ techniques that British Columbia Vancouver, BC, Canada). It focused on the nonlinear modeling of a quadcopter based on Constraint model based predictive control (MBPC) controller [2] for example fuzzy control, PD controllers and Neural-Network controllers. Back-stepping controllers [3], vision based control methodology that study at the University of Pennsylvania [4]

*Corresponding Author. (✉)
E-mail: Ea.educate@liau.ac.ir (**M. Eatemadi**)

M. Eatemadi
Department of Electrical Engineering, Lashtenesha-Zibakenar Branch, Islamic Azad University, Lashtenesha, Iran

[Downloaded from ijaor.ir on 2026-11-28]

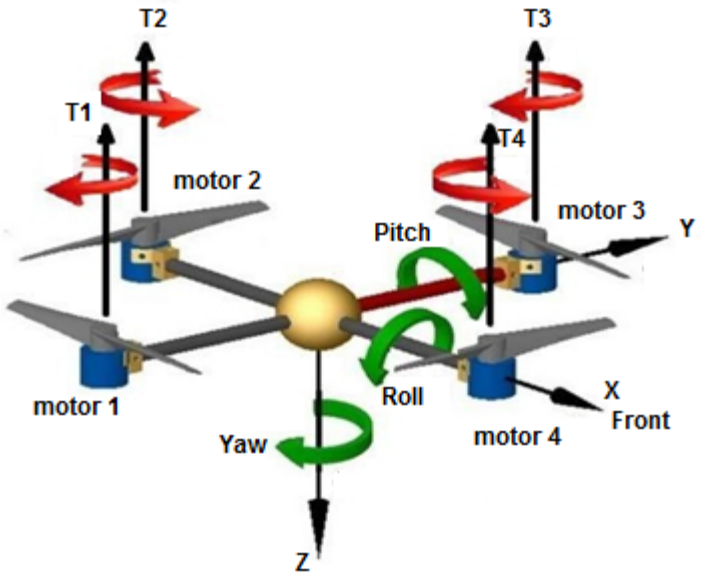

Fig. 1 quadcopter

The main challenge of this robot is high consumption energy, low endurance and nonlinear features that is under process for better result. We present the simplified model of the kinematics, dynamics equations of motions, and control of quadcopter that simulated in Matlab environment for better understanding and used for developing the flight control scheme.

2 Quadcopter's kinematics and dynamics

In this section introduce two frames, at first ground frame that called inertial frame with gravity pointing the ground and second one, the body-fixed frame defined by rotor axes Direction.

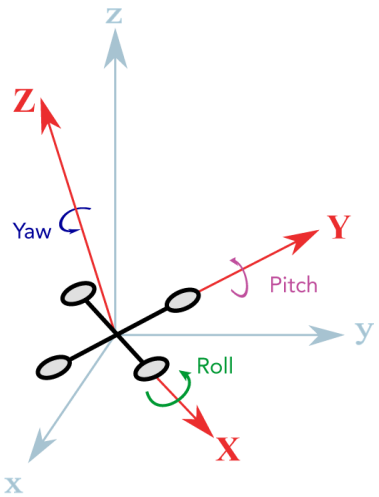

Fig. 2 Inertial Frame, Red: Body Frame

[Downloaded from ijaor.ir on 2026-11-28]

The assumptions of this modeling mention at the following [5, 6]:
1. Structure is rigid and symmetry.
2. CG of vehicle and origin of Body axis system coincide.
3. The rotors are rigid in quadcopter.
Now we define the position and velocity in the ground frame as:

$$\mathrm{x} = \left(\mathrm{x}, \mathrm{y}, \mathrm{z}\right)^T \tag{1}$$

$$\dot{\mathrm{x}} = \left(\dot{\mathrm{x}}, \dot{\mathrm{y}}, \dot{\mathrm{z}}\right)^T \tag{2}$$

Also the Roll, Pitch and Yaw angles in body frame as:

$$\theta = \left(\phi, \theta, \psi\right)^T \tag{3}$$

The time derivative of (3) gives the angular velocities:

$$\dot{\theta} = \left(\dot{\phi}, \dot{\theta}, \dot{\psi}\right)^T \tag{4}$$

The angular velocity vector in the body frame:

$$\omega = \begin{bmatrix} 1 & 0 & -sin\theta \\ 0 & cos\phi & cos\theta sin\phi \\ 0 & -sin\phi & cos\theta cos\phi \end{bmatrix} \dot{\theta} \tag{5}$$

A rotation matrix M relates the body frame to the ground frame that obtained of the ZYX Euler angle conventions:

$$M = \begin{bmatrix} \cos\phi.\cos\psi - cos\theta.sin\phi.sin\psi & -cos\psi.sin\phi - \cos\phi.cos\theta.sin\psi & \sin\theta.sin\psi \\ cos\theta.\cos\psi.sin\phi + \cos\phi.sin\psi & \cos\phi.cos\theta.cos\psi - \sin\phi.sin\psi & -cos\psi.sin\theta \\ sin\phi.sin\theta & \cos\phi.\sin\phi & \cos\theta \end{bmatrix} \tag{6}$$

Now we have dynamics model of quadcopter, for each vector $\vec{v}$ in body frame the corresponding vector is given by $\vec{mv}$ in the ground frame. For understanding the properties of system, we need simulate motors model and energy consumption for providing the forces and thrust. For electric brushless motors, the torque modeled as:

$$\tau = k_t\left(I - I_0\right) \tag{7}$$

where I is input current, I is no load current and k_t is the torque proportionality constant
And the voltage of motor is:

$$V = IR_m + K_\upsilon\omega \tag{8}$$

where V is motor voltage, R_m is the motor resistance, motor EMF constant and ω is angular velocity

Power consumptions of each motor:

$$P = IV = \frac{\left(\tau + k_t\mathrm{I}_0\right)\left(k_t\mathrm{I}_0\mathrm{R}_\mathrm{m} + \tau\mathrm{R}_\mathrm{m} + k_t\mathrm{K}_\upsilon\omega\right)}{k_t^{\,2}} \tag{9}$$

Assume that motor resistance is very low. Then, the power becomes proportional to the angular velocity, so we can rewrite (9) as below:

[Downloaded from ijaor.ir on 2026-11-28]

$$P \approx \frac{(\tau + k_t \mathrm{I}_0)\mathrm{K}_\upsilon \omega}{k_t} \tag{10}$$

The term $\mathrm{I}_0 << \tau$ then we can write:

$$P \approx \frac{\mathrm{K}_\upsilon}{k_t}\tau\omega \tag{11}$$

The power for keeping the quadcopter:

$P.dt = F.dx$

where P is power used, F force generated, dt time and dx distance of air flow movement.

$v = \frac{dx}{dt}$ then we have $P \approx \mathrm{T}v$ (12)

Where T is the total thrust of four motors and v is the air velocity in hover saturation of copter.

The Momentum theory gives the following equivalent [7]:

$$v = \sqrt{\frac{\mathrm{T}}{2\rho\mathrm{A}}} \tag{13}$$

that ρ is the air density ,and A is the propellers swap area.

Combination of (12) and (13) gives us :

$$P \approx \mathrm{T}v \ , \ v = \sqrt{\frac{\mathrm{T}}{2\rho\mathrm{A}}} \rightarrow P \approx \mathrm{T}\sqrt{\frac{\mathrm{T}}{2\rho\mathrm{A}}} \rightarrow P \approx \frac{\mathrm{T}^{\frac{3}{2}}}{\sqrt{2\rho\mathrm{A}}} \tag{14}$$

The torque of each motor is

$$\tau = k_\tau \times T \tag{15}$$

that k_τ is depended to propeller property such as size and pitch.

Combination of (11),(14)and (15) gives us:

$$\frac{\mathrm{T}^{\frac{3}{2}}}{\sqrt{2\rho\mathrm{A}}} \approx \frac{\mathrm{K}_\upsilon}{k_t}(k_\tau \times T)\omega \rightarrow \mathrm{T} = \left(\frac{\mathrm{K}_\upsilon k_\tau}{k_t}\sqrt{2\rho\mathrm{A}}\omega\right)^2 = \mathrm{k}\omega^2 \tag{16}$$

According to the obtained result of (16) the thrust proportional to propeller property and square of propeller rotation speed.

The total thrust of all motors (quadcopter) on body frame:

$$T_B = (T_1 + T_2 + T_3 + T_4) \tag{17}$$

Propellers have same size and pitch, so:

$$T_B = K.\left(\omega_1^2 + \omega_2^2 + \omega_3^2 + \omega_4^2\right) \tag{18}$$

Now we can estimate the forces and torques effected on copter, each motor have the torque on copter around Z axis, because of drag forces as following equivalent:

$$\mathrm{F}_\mathrm{D} = \frac{1}{2}\rho\mathrm{C}_\mathrm{D}\mathrm{A}.v^2 \tag{19}$$

Where F_D is frictional or Drag Force, ρ is the air density, C_D is the drag coefficient, A is the area of blade, v is the velocity of blade spinning.

The rotational provided torque equivalent is as following

$$\tau = R \times F \tag{20}$$

[Downloaded from ijaor.ir on 2026-11-28]

Where R is radius of blade, so we have following equivalent for Drag torque

$\tau_D = \mathrm{R}.\frac{1}{2}\rho \mathrm{C_D A}.v^2$ and rotational velocity is $v = R.\omega$, so

We have:

$$\tau_{\mathrm{D}} = \mathrm{R}.\frac{1}{2}\rho \mathrm{C_D A}.\left(R\omega\right)^2 = \beta\omega^2 \tag{21}$$

Where β is drag coefficient:

For torque of each motor we can write

$$\tau_{\mathrm{z}} = \beta\omega^2 + I_m\dot{\omega} \tag{22}$$

Where I_m is moment of inertia of each motor and $\dot{\omega}$ is acceleration of rotational rotor then in stable hover flight we can equal it to zero. Now we have:

$$\tau_{\mathrm{z}} \approx \tau_{\mathrm{D}} \tag{23}$$

In hover stable saturation

For all motors that effect on yaw axis, we can write

$$\tau_{\mathrm{yaw}} = \beta\left(\omega_1^{\,2} - \omega_2^{\,2} + \omega_3^{\,2} - \omega_4^{\,2}\right) \tag{24}$$

Where τ_{yaw} is total torque and ω_2, ω_4 spinning in opposite direction.

The pitch torque axis is given by $\tau_{\mathrm{pitch}} = L \times T_{pitch}$ where L is the copter's arm lengthy, T_{pitch} is the total thrust on pitch axis, so

$$\tau_{\mathrm{pitch}} = T_2 - T_4 \tag{25}$$

We can use (18) and write

$$\tau_{pitch} = L \times k(\omega_2^{\,2} - \omega_4^{\,2}) \tag{26}$$

As same above, for Roll axis

$$\tau_{roll} = L \times k(\omega_1^{\,2} - \omega_3^{\,2}) \tag{27}$$

Torques on body given by

$$\tau_{\mathrm{body}} = \begin{bmatrix} \tau_{\mathrm{roll}} \\ \tau_{\mathrm{pitch}} \\ \tau_{\mathrm{yaw}} \end{bmatrix} \tag{28}$$

Now we can write equation of motion by using thrust vector in ground frame that obtain by rotation matrix M from body frame:

$$m\ddot{x} = \begin{bmatrix} 0 \\ 0 \\ -mg \end{bmatrix} + M \times T_B + F_D \tag{29}$$

Where m is mass of copter, g is acceleration of gravity, T_B the total thrust of four motor on body frame, F_D is Drag Force and $\ddot{x}$ is liner acceleration.

3 Control Systems

The overall control system as described in [8,9]. But PID controller is a widely used feedback control loop in quadcopter, this technique has already been investigated to design this controller[6]. The model has been linearised around the hover position. Hence, the gyroscopic

[Downloaded from ijaor.ir on 2026-11-28]

effects haven't been taken into consideration in the controller Design, [10]. It uses the sum of Proportional, Integral and Derivative of error signal that obtain by compare between real output of copter with desired position given as input system.

$$e(t) = in(t) - out(t) \tag{30}$$

where $e(t)$ is error signal, $in(t)$ is input reference signal and $out(t)$ is current output signal (current position of copter). PID controllers need to tune for the best response and the lowest Error. Following picture shown the basic structure of Proportional, Integral, Derivative control system.

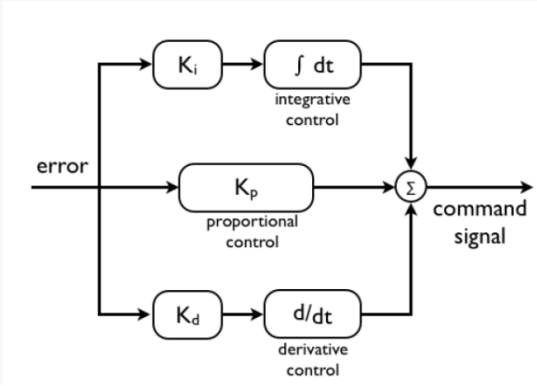

Fig. 3 PID control system

Fig.3 shown the basic PID system that described by Equation [11]:

$$u(t) = k_p e(t) + k_i \int e(t_p)\,dt + k_d \frac{de(t)}{dt} \tag{31}$$

At above equation t_p is the past time and k_p is proportional constant multiple to error signal that effect on the power of motors for reducing errors. Decreasing this term create unstably on the copter and increase the time of minimum error obtain and also increasing it leads to wobble the copter around input desired point, in other words, Too much k_p will cause to oscillate quickly.

The integral term gives assume of errors over the time. We observe that k_i leads to smaller steady state error, but increasing this term, lead to overshoot. If the copter has quick and large wobble at the very short time, it will be the reason of large errors and it make the large output signals and overshot or take a long time to reach the minimum error at steady state.

The derivative term gives the rate of error changing, and decreasing the overshoot around the desired input. We found that the best way for manual tuning PID coefficient k_p, k_i, k_d is that set to zero and increase the k_p until copter begin to oscillate around desired input point, then increase the k_i until reduce the settling time without lead to instability at least. And now Increase the k_d for decreasing the overshot without over damping of the copter. In this project, we used 10 degrees of freedom inertial-measurement unit (IMU), that consist of 3 axis Gyroscope, 3 axis acceleration, 3 axis magnetometer, and Barometer for sensing and reading angle of copter in 3 axis. The raw output data of IMU determine the roll, pitch, yaw and altitude change value. Figure 4 shows the basic structure of the project.

[Downloaded from ijaor.ir on 2026-11-28]

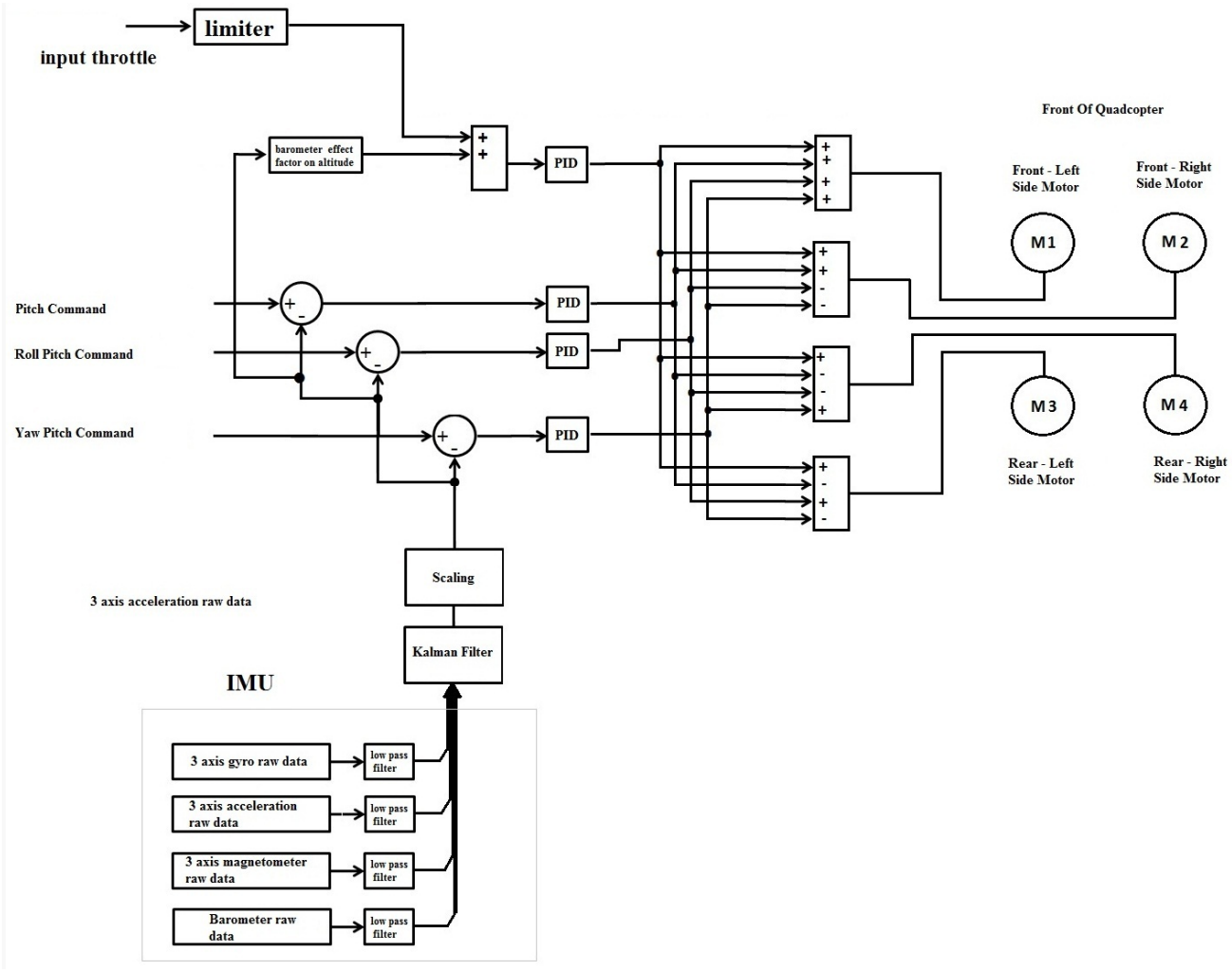

Fig. 4 Block diagram of control system

The quadcopter is a Symmetric device. So, it means the same PID coefficients on roll and pitch axis. Yaw axis rotation sensed by the magnetometer and IMU for determine the error of Yaw angle, then the other PID controller with different correct coefficient, control and track the yaw input command. The altitude of copter determined by throttle value (input command) and measured by barometer sensor, similarly, it tracks input throttle with separate PID controller.

Our gyroscope, Accelerometer and magnetometer provide the raw data in the range of [0 to 255] on each axis (depends on the resolution of sensors), then data pass the different Kalman filters for smoothing the noisy data.

The main loop of system control, at first read the input command that received from ground operator, and then Subtract scaled output of Kalman filter from scaled input position received. Now calculate the errors on each axis, between the quadcopter current position and desired position, so, save the error and use the PID equations for obtaining the output motor commands to reduce the errors.

Our experimental PID coefficients that leads to a smooth flight around the desired position (for example hover situation) are:

In roll and pitch axis

[Downloaded from ijaor.ir on 2026-11-28]

$k_p = 0.16$, $k_i = 0.05$, $k_d = 0.008$

In Yaw axis

$k_p = 0.11$, $k_i = 0.065$, $k_d = 0.006$

Altitude or Z axis

$k_p = 1.5$, $k_i = 0.09$, $k_d = 0.01$

The following pictures shown the test result of quadcopter, that can normal flying, hover and Cruise without any problems based on this modeling and PID controller.

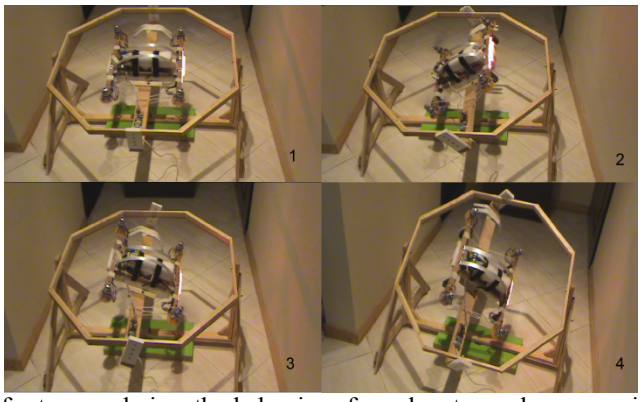

Fig. 5 Bench test platform for tune and view the behavior of quadcopter and compare it's with the mathematical model



Fig. 6 Flying the quadcopter

4 Conclusion

In This article, detailed mathematical modeling of the quadcopter's kinematics and dynamics was provided. The kinematics part of the modeling describes the motion of the quadcopter without considering the forces affecting it while the dynamics describes the forces requires causing the motion. This provides a view of quadcopter responds when affected by a force in the form of a rotational matrix. Nonlinear state equations for the Quadcopter system have been derived and the manual way for PID tuning to achieve the minimum steady state error have been proposed. As a result of this study a quadcopter with a composite frame has been assembled and real time implementation of a PID control for the Pitch, Roll and attitude stabilization has been done and shown to work with the hardware setup at hover point.

[Downloaded from ijaor.ir on 2026-11-28]

Acknowledgements

This project was conducted as a research project at the Department of Electrical Engineering, Lashtenesha-Zibakenar Branch Islamic Azad University.

References

1. Bouabdallah, S., Murrieri, P., Siegwart, R., (2004). Design and Control of an Indoor Micro Quadrotor, International Conference on Robotics and Automation, New Orleans, USA.
2. Chen, M., Huzmezan, M., (2003). A Combined MBPC 2 DOF H∞ Controller for a Quad Rotor UAV, Department of Electrical and Computer Engineering University of British Columbia Vancouver, BC, Canada, V6T 1Z4,
3. Johnson, E. N., (2006). UAV research at Georgia tech., Georgia Tech School of Aerospace Engineering, June 3, 2002, http://www.ae.gatech.edu/, retrieved December.
4. Altug, E., (2003). Vision based control of unmanned aerial vehicles with applications toan autonomous four rotor helicopter, Quad rotor, PhD thesis, University of Pennsylvania,
5. Castillo, P., Lozano, R., Dzul, A. E., (2005). Modeling and Control of Mini-Flying Machines, Springer-Verlag, New York, 39-60.
6. Bouabdallah, S., Noth, A., Siegwart, R., (2004). PID vs LQ control techniques applied to an indoor micro quad rotor, Swiss Federal Institute of Technology.
7. Torenbeek, E., Wittenberg, H., (2009). Flight Physics: Essentials of Aeronautical Disciplines and Technology, with Historical Notes' Springer Science & Business Media, Jul 6.
8. Voos, H., (2009). Nonlinear Control of a Quadrotor Micro-UAV using Feedback-Linearization. IEEE Int Conf on Mechatronics, M_alaga, Spain.
9. Voos, H., (2009). Entwurf eines Flugreglers fuer ein vierrotoriges unbemanntes Flug-geraet (in German). at-Automatisierungstechnik, 57(9), (to appear).
10. BALAS, C., (2006-2007). Modelling and Linear Control of a Quadrotor, [dissertation], cranfield university, Academic year.
11. Astrom, J., (2002). Control System Design, Lecture Notes, Department of Mechanical and Environmental Engineering University of California, Santa Barbara, chapter 6, PID Controller.

[Downloaded from ijaor.ir on 2026-11-28]